MAX. ENGINE POWER: 123kW (165hp) MAX. OPERATING WEIGHT: 14730kg (32474lb) MAX. LOADER CAPACITY: 2.7m³ (3.5yd³)

426/426e HT – STATIC DIMENSIONS – Standard height arm

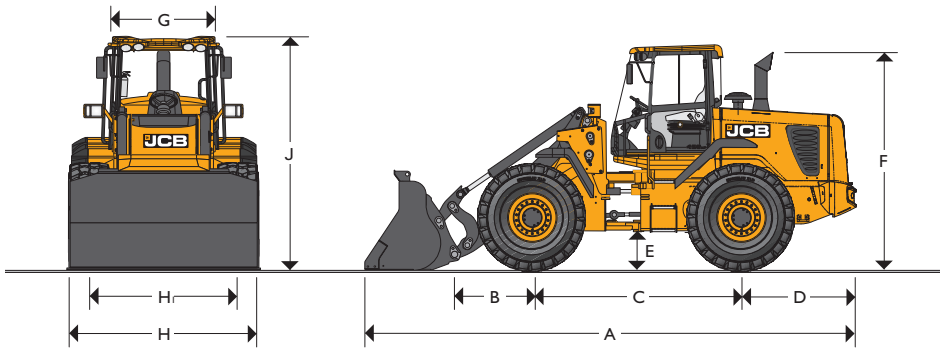

426/426e HT – STATIC DIMENSIONS – High lift arm

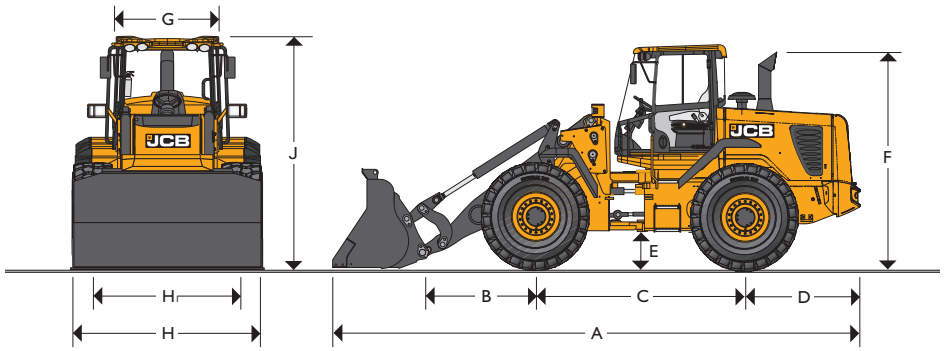

426/426e HT – STATIC DIMENSIONS – Standard height arm

		mm (ft-in)
A Overall length with standard bucket		6831 (22-5)
B Axle to pivot pin		1096 (3-7)
C Wheel Base		3000 (9-8)
D Axle to counterweight face		1816 (5-11)
E Minimum ground clearance		442 (1-5)
F Height over exhaust		3192 (10-6)
G Width over cab		1400 (4-7)
H Width over tyres		2482 (8-2)
H1 Wheel track		1955 (6-5)
J Height over cab		3335 (10-11)
Pin height (maximum)		3906 (12-10)
Overall operating height		5095 (16-9)
Front axle weight	kg (lb)	5574 (12289)
Rear axle weight	kg (lb)	7126 (15710)
Total weight	kg (lb)	12700 (27999)
Inside radius		2920 (9-7)
Maximum radius		5790 (19-0)
Articulation angle	degrees	±40°

Data based on machine equipped with pin mounted 1.9m³ bucket with bolt-on toeplates and 20.5R25 XHA (L3) tyres.

426/426e HT – STATIC DIMENSIONS – High lift arm

		mm (ft-in)
A Overall length with standard bucket		7244 (23-9)
B Axle to pivot pin		1509 (3-7)
C Wheel Base		3000 (9-8)
D Axle to counterweight face		1816 (5-11)
E Minimum ground clearance		442 (1-5)
F Height over exhaust		3192 (10-6)
G Width over cab		1400 (4-7)
H Width over tyres		2482 (8-2)
H1 Wheel track		2070 (6-9)
J Height over cab		3335 (10-11)
Pin height (maximum)		4336 (14-3)
Overall operating height		5525 (18-2)
Front axle weight	kg (lb)	5869 (12939)
Rear axle weight	kg (lb)	7101 (15655)
Total weight	kg (lb)	12970 (28594)
Inside radius		2825 (9-3)
Maximum radius over shovel		5985 (19-6)
Articulation angle	degrees	±40°

Data based on machine equipped with pin mounted 1.9m³ bucket with bolt-on toeplates and 20.5R25 XHA (L3) tyres.

MAX. ENGINE POWER: 123kW (165hp) MAX. OPERATING WEIGHT: 14720kg (31570lb) MAX. LOADER CAPACITY: 2.1m³ (2.8yd³)

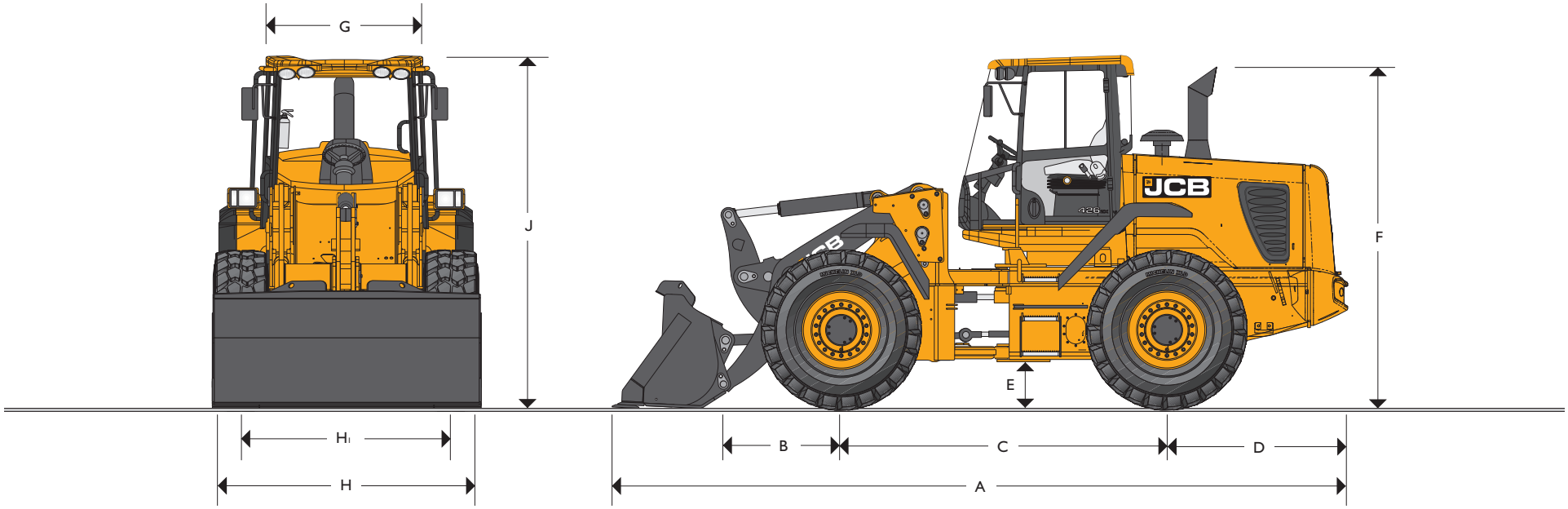

426/426e ZX – STATIC DIMENSIONS

		mm (ft-in)
A	Overall length with standard bucket	6831 (22-5)
B	Axle to pivot pin	1096 (3-7)
C	Wheel Base	3000 (9-8)
D	Axle to tow hitch	1816 (5-11)
E	Minimum ground clearance	442 (1-5)
F	Height over exhaust	3192 (10-6)
G	Width over cab	1400 (4-7)
H	Width over tyres	2482 (8-2)
H1	Wheel track	1955 (6-5)
J	Height over cab	3335 (10-11)

		mm (ft-in)
Pin height (maximum)		3906 (12-10)
Overall operating height		5095 (18-3)
Front axle weight	kg (lb)	5830 (12853)
Rear axle weight	kg (lb)	7020 (15476)
Total weight	kg (lb)	12850 (28329)
Inside radius		2920 (9-7)
Maximum radius over shovel		5790 (19-0)
Articulation angle	degrees	±40°

Data based on machine equipped with pin mounted 1.9m³ bucket with bolt-on toeplates and 20.5R25 XHA (L3) tyres.

426/426e HT – LOADER DIMENSIONS – Standard height arm

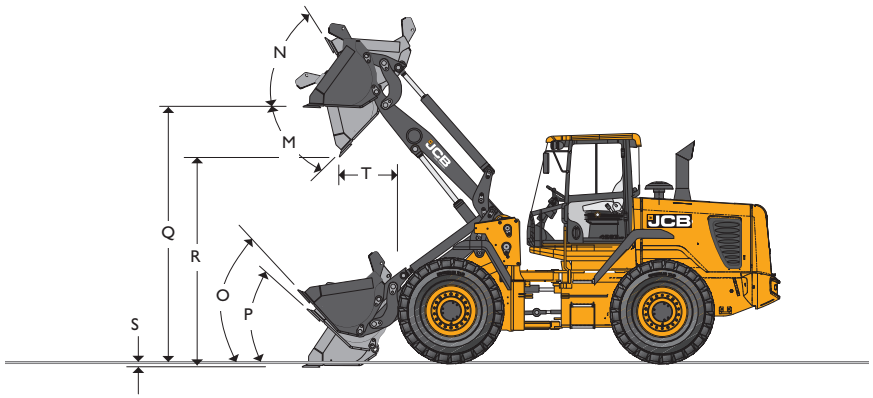

CHANGES TO OPERATING PERFORMANCE AND DIMENSIONS

Tyre size	Manufacturer	Type	Rating	Op. weight kg (lb)	Tipping loads Straight kg (lb)	Tipping loads Full turn kg (lb)	Dimensions Vertical mm (in)	Dimensions Width mm (in)
20.5 - 25 (crossply)	Firestone	SGG	L2	-348 (-770)	-245 (-540)	-215 (-475)	-9 (-0.354)	+5 (+0.197)
20.5 - 25 (crossply)	Goodyear	SGL D/L	L2	-216 (-476)	-152 (-335)	-134 (-295)	-9 (-0.354)	+5 (+0.197)
20.5 R 25 (radial)	Goodyear	RL - 2 +	L2	+76 (+168)	+54 (+120)	+47 (+104)	-9 (-0.354)	+5 (+0.197)
20.5 R 25 (radial)	Bridgestone	VUT	L2	-160 (-353)	-113 (-250)	-99 (-220)	0	0
20.5 R 25 (radial)	Michelin	XTLA	L2	-160 (-353)	-113 (-250)	-99 (-220)	-9 (-0.354)	+5 (+0.197)
20.5 R 25 (radial)	Bridgestone	VMT	L3	0	0	0	0	0
550/65 R 25 (radial)	Michelin	XLD	L3	-120 (-265)	-85 (-187)	-75 (-165)	0	0
20.5 R 25 (radial)	Michelin	XRD1A	L4	+332 (+732)	+257 (+566)	+206 (+454)	+29 (+1.142)	+8 (+0.315)
20.5 R 25 (radial)	Michelin	XMINED2	L5	+680 (+1500)	+480 (+1060)	+421 (+928)	+29 (+1.1.42)	-3 (-0.118)
20.5 R 25 (radial)	Goodyear	RL-5K	L5	+600 (+1323)	+423 (+933)	+372 (+820)	+29 (+1.142)	-3 (-0.118)
620/75 R25 (radial)	Michelin	MEGA XBIB		-107 (-235)	-75 (-165)	-67 (-148)	+62 (+2.5)	+258 (+10.2)
Optional additional bolt-on counterweight				+380 (+838)	+707 (+1559)	+598 (+1318)	0	0

Assumes the machine is fitted with 1.9m³ shovel with toeplates and Michelin 20.5R25 XHA (L3) tyres.

	Bucket mounting		Direct	Direct	Direct	Direct	Direct	Direct	Quickhitch	Quickhitch	Quickhitch	Quickhitch	Quickhitch	Quickhitch
	Bucket type		General Purpose	General Purpose	General Purpose	General Purpose	General Purpose	General Purpose	General Purpose	General Purpose	General Purpose	General Purpose	General Purpose	General Purpose
	Bucket equipment		Tipped teeth	Tipped teeth	Reversible t/plate	Reversible t/plate	Reversible t/plate	Reversible t/plate	Tipped teeth	Tipped teeth	Reversible t/plate	Reversible t/plate	Reversible t/plate	Reversible t/plate
	Bucket capacity (SAE heaped)	m³ (yd³)	1.8 (2.4)	2.0 (2.6)	1.9 (2.5)	2.1 (2.8)	2.4 (3.1)	2.7 (3.5)	1.8 (2.4)	2.0 (2.6)	1.9 (2.5)	2.1 (2.8)	2.4 (3.1)	2.7 (3.5)
	Bucket capacity (struck)	m³ (yd³)	1.556 (2.035)	1.765 (2.309)	1.616 (2.114)	1.830 (2.394)	2.057 (2.691)	2.346 (3.068)	1.554 (2.033)	1.749 (2.288)	1.594 (2.085)	1.787 (2.337)	2.057 (2.691)	2.346 (3.068)
	Bucket width	mm (ft-in)	2550 (8-4)	2550 (8-4)	2550 (8-4)	2550 (8-4)	2700 (8-10)	2700 (8-10)	2550 (8-4)	2550 (8-4)	2550 (8-4)	2550 (8-4)	2700 (8-10)	2700 (8-10)
	Bucket weight	kg (lb)	810 (1786)	850 (1875)	810 (1786)	850 (1875)	1136 (2500)	1211 (2664)	800 (1765)	850 (1875)	800 (1765)	850 (1875)	1136 (2500)	1211 (2664)
	Maximum material density	kg/m³ (lb/yd³)	2332 (3931)	2068 (3486)	2209 (3723)	1969 (3319)	1655 (2790)	1439 (2426)	2125 (3582)	1884 (3176)	2013 (3393)	1794 (3024)	1508 (2542)	1311 (2210)
	Tipping load straight	kg (lb)	9819 (21647)	9797 (21599)	9819 (21647)	9797 (21599)	9334 (20578)	9147 (20166)	8983 (19804)	8859 (19531)	8983 (19804)	8859 (19531)	8554 (18858)	8384 (18483)
	Tipping load full turn	kg (lb)	8396 (18510)	8271 (18234)	8396 (18510)	8271 (18234)	7944 (17514)	7774 (17139)	7650 (16865)	7537 (16616)	7650 (16865)	7537 (16616)	7243 (15968)	7085 (15619)
	Payload	kg (lb)	4198 (9254)	4136 (9118)	4198 (9254)	4136 (9118)	3972 (8757)	3887 (8569)	3825 (8433)	3768 (8307)	3825 (8433)	3768 (8307)	3621 (7983)	3542 (7809)
	Maximum break out force	kN (lbf)	138 (31000)	128 (28800)	138 (31000)	128 (28800)	123 (27620)	115 (25820)	121 (27270)	113 (25490)	121 (27270)	113 (25490)	106 (23800)	99 (22240)
M	Dump angle maximum	degrees	49°	49°	49°	49°	49°	49°	49°	49°	49°	49°	49°	49°
N	Roll back angle at full height	degrees	58°	58°	58°	58°	58°	58°	58°	58°	58°	58°	58°	58°
O	Roll back at carry	degrees	48°	48°	48°	48°	48°	48°	48°	48°	48°	48°	48°	48°
P	Roll back at ground level	degrees	43°	43°	43°	43°	43°	43°	43°	43°	43°	43°	43°	43°
Q	Load over height	mm (ft-in)	3627 (11-11)	3627 (11-11)	3612 (11-10)	3612 (11-10)	3610 (11-10)	3610 (11-10)	3627 (11-11)	3627 (11-11)	3612 (11-10)	3612 (11-10)	3610 (11-10)	3610 (11-10)
R	Dump height (45° dump)	mm (ft-in)	2817 (9-3)	2767 (9-1)	2944 (9-8)	2896 (9-6)	2860 (9-4)	2796 (9-2)	2697 (8-10)	2647 (8-8)	2848 (9-4)	2775 (9-0)	2739 (9-0)	2676 (8-9)
S	Dig depth	mm (ft-in)	50 (0-2)	50 (0-2)	47 (0-4.5)	47 (0-4.5)	47 (0-4.5)	47 (0-45)	50 (0-2)	50 (0-2)	47 (0-4.5)	47 (0-4.5)	47 (0-4.5)	47 (0-4.5)
T	Reach at dump height	mm (ft-in)	1071 (3-6)	1121 (3-8)	946 (3-1)	996 (3-3)	1028 (3-4)	1092 (3-7)	1191 (3-11)	1240 (4-1)	1052 (3-5)	1118 (3-8)	1149 (3-9)	1213 (4-0)
	Reach maximum (45° dump)	mm (ft-in)	1818 (6-0)	1868 (6-2)	1693 (5-7)	1743 (5-8)	1775 (5-10)	1839 (6-0)	1938 (6-4)	1987 (6-6)	1800 (5-11)	1865 (6-1)	1896 (6-3)	1960 (6-5)
	Operating weight (includes 80kg operator and full fuel tank)	kg (lb)	12700 (27999)	12740 (28087)	12700 (27999)	12740 (28087)	13025 (28715)	13100 (28881)	12980 (28616)	13030 (28726)	12980 (28616)	13030 (28726)	13316 (29356)	13390 (29520)

426/426e HT – LOADER DIMENSIONS – High lift arm

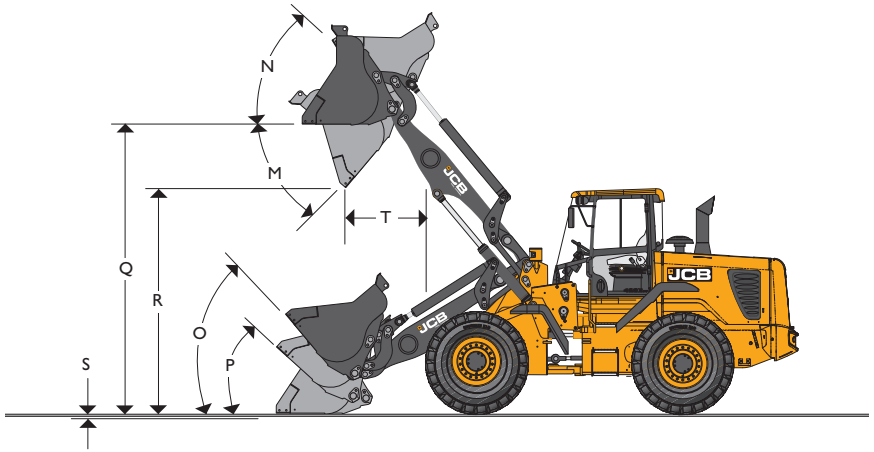

CHANGES TO OPERATING PERFORMANCE AND DIMENSIONS

Tyre size	Manufacturer	Type	Rating	Op. weight kg (lb)	Tipping loads Straight kg (lb)	Tipping loads Full turn kg (lb)	Dimensions Vertical mm (in)	Dimensions Width mm (in)
20.5 - 25 (crossply)	Firestone	SGG	L2	-348 (-770)	-204 (-450)	-179 (-394)	-9 (-0.354)	+5 (+0.197)
20.5 - 25 (crossply)	Goodyear	SGL D/L	L2	-216 (-476)	-126 (-227)	-111 (-246)	-9 (-0.354)	+5 (+0.197)
20.5 R 25 (radial)	Goodyear	RL - 2 +	L2	+76 (+168)	+45 (+99)	+39 (+86)	-9 (-0.354)	+5 (+0.197)
20.5 R 25 (radial)	Bridgestone	VUT	L2	-160 (-353)	-94 (-207)	-82 (-182)	0	0
20.5 R 25 (radial)	Michelin	XTLA	L2	-160 (-353)	-94 (-207)	-82 (-182)	-9 (-0.354)	+5 (+0.197)
20.5 R 25 (radial)	Bridgestone	VMT	L3	0	0	0	0	0
550/65 R 25 (radial)	Michelin	XLD	L3	-120 (-265)	-71 (-156)	-62 (-138)	0	0
20.5 R 25 (radial)	Michelin	XRD1A	L4	+332 (+732)	+214 (+471)	+171 (+378)	+29 (+1.142)	+8 (+0.315)
20.5 R 25 (radial)	Michelin	XMINED2	L5	+680 (+1500)	+399 (+880)	+350 (+772)	+29 (+1.1.42)	-3 (-0.118)
20.5 R 25 (radial)	Goodyear	RL-5K	L5	+600 (+1323)	+352 (+776)	+310 (+682)	+29 (+1.142)	-3 (-0.118)
620/75 R25 (radial)	Michelin	MEGA XBIB		-107 (-235)	-62 (-137)	-56 (-123)	+62 (+2.5)	+258 (+10.2)
Optional additional bolt-on counterweight				+380 (+838)	+604 (+1559)	+513 (+1318)	0	0

Assumes the machine is fitted with 1.9m³ shovel with toeplates and Michelin 20.5R25 XHA (L3) tyres.

	Bucket mounting		Direct	Direct	Direct	Direct	Direct	Direct	Quickhitch	Quickhitch	Quickhitch	Quickhitch	Quickhitch	Quickhitch
	Bucket type		General Purpose	General Purpose	General Purpose	General Purpose	General Purpose	General Purpose	General Purpose	General Purpose	General Purpose	General Purpose	General Purpose	General Purpose
	Bucket equipment		Tipped teeth	Tipped teeth	Reversible t/plate	Reversible t/plate	Reversible t/plate	Reversible t/plate	Tipped teeth	Tipped teeth	Reversible t/plate	Reversible t/plate	Reversible t/plate	Reversible t/plate
	Bucket capacity (SAE heaped)	m³ (yd³)	1.8 (2.4)	2.0 (2.6)	1.9 (2.5)	2.1 (2.8)	2.4 (3.1)	2.7 (3.5)	1.8 (2.4)	2.0 (2.6)	1.9 (2.5)	2.1 (2.8)	2.4 (3.1)	2.7 (3.5)
	Bucket capacity (struck)	m³ (yd³)	1.556 (2.035)	1.765 (2.309)	1.616 (2.114)	1.830 (2.394)	2.057 (2.691)	2.346 (3.068)	1.554 (2.033)	1.749 (2.288)	1.594 (2.085)	1.787 (2.337)	2.057 (2.691)	2.346 (3.068)
	Bucket width	mm (ft-in)	2550 (8-4)	2550 (8-4)	2550 (8-4)	2550 (8-4)	2700 (8-10)	2700 (8-10)	2550 (8-4)	2550 (8-4)	2550 (8-4)	2550 (8-4)	2700 (8-10)	2700 (8-10)
	Bucket weight	kg (lb)	810 (1786)	850 (1875)	810 (1786)	850 (1875)	1136 (2500)	1211 (2664)	800 (1765)	850 (1875)	800 (1765)	850 (1875)	1136 (2500)	1211 (2664)
	Maximum material density	kg/m³ (lb/yd³)	1947 (3282)	1726 (2909)	1844 (3108)	1644 (2771)	1381 (2328)	1201 (2024)	1774 (2990)	1573 (2651)	1681 (2833)	1498 (2525)	1260 (2124)	1095 (1846)
	Tipping load straight	kg (lb)	8199 (18076)	8180 (18033)	8199 (18076)	8180 (18033)	7794 (17183)	7638 (16839)	7501 (16537)	7397 (16308)	7501 (16537)	7397 (16308)	7142 (15754)	7000 (15432)
	Tipping load full turn	kg (lb)	7010 (15454)	6906 (15225)	7010 (15454)	6906 (15225)	6633 (14623)	6491 (14310)	6388 (14083)	6293 (13874)	6388 (14083)	6293 (13874)	6048 (13334)	5916 (13043)
	Payload	kg (lb)	3505 (7727)	3453 (7613)	3505 (7727)	3453 (7613)	3316 (7311)	3245 (7154)	3194 (7042)	3146 (6936)	3194 (7042)	3145 (6936)	3024 (6667)	2958 (6521)
	Maximum break out force	kN (lbf)	138 (31000)	128 (28800)	138 (31000)	128 (28800)	123 (27620)	115 (25820)	121 (27270)	113 (25490)	121 (27270)	113 (25490)	106 (23800)	99 (22240)
M	Dump angle maximum	degrees	45°	45°	45°	45°	45°	45°	45°	45°	45°	45°	45°	45°
N	Roll back angle at full height	degrees	58°	58°	58°	58°	58°	58°	58°	58°	58°	58°	58°	58°
O	Roll back at carry	degrees	50°	50°	50°	50°	50°	50°	50°	50°	50°	50°	50°	50°
P	Roll back at ground level	degrees	48°	48°	48°	48°	48°	48°	48°	48°	48°	48°	48°	48°
Q	Load over height	mm (ft-in)	4057 (13-4)	4057 (13-4)	4042 (13-3)	4042 (13-3)	4040 (13-3)	4040 (13-3)	4057 (13-4)	4057 (13-4)	4042 (13-3)	4042 (13-3)	4040 (13-3)	4040 (13-3)
R	Dump height (45° dump)	mm (ft-in)	3247 (10-8)	3197 (10-6)	3374 (11-1)	3326 (10-11)	3290 (10-10)	3226 (10-7)	3212 (10-7)	3127 (10-3)	3278 (10-9)	3205 (10-6)	3169 (10-4)	3106 (10-2)
S	Dig depth	mm (ft-in)	113 (0-4)	113 (0-4)	110 (0-4)	110 (0-4)	110 (0-4)	110 (0-4)	128 (0-5)	113 (0-4)	110 (0-4)	110 (0-4)	110 (0-4)	110 (0-4)
T	Reach at dump height	mm (ft-in)	1233 (4-1)	1983 (6-6)	1108 (3-8)	1158 (3-10)	1190 (3-11)	1254 (4-1)	1244 (4-1)	1253 (4-1)	1214 (4-0)	1280 (4-2)	1311 (4-3)	1375 (4-6)
	Reach maximum (45° dump)	mm (ft-in)	2166 (7-1)	2216 (7-3)	2041 (6-8)	2091 (6-10)	2123 (7-0)	2187 (7-2)	2177 (7-2)	2286 (7-6)	2148 (7-0)	2213 (7-3)	2244 (7-4)	2308 (7-4)
	Operating weight (includes 80kg operator and full fuel tank)	kg (lb)	12970 (28594)	13010 (28682)	12970 (28594)	13010 (28682)	13925 (30699)	13370 (29476)	13250 (29211)	13300 (29321)	13250 (29211)	13300 (29321)	13586 (29952)	13660 (30115)

426/426e ZX – LOADER DIMENSIONS

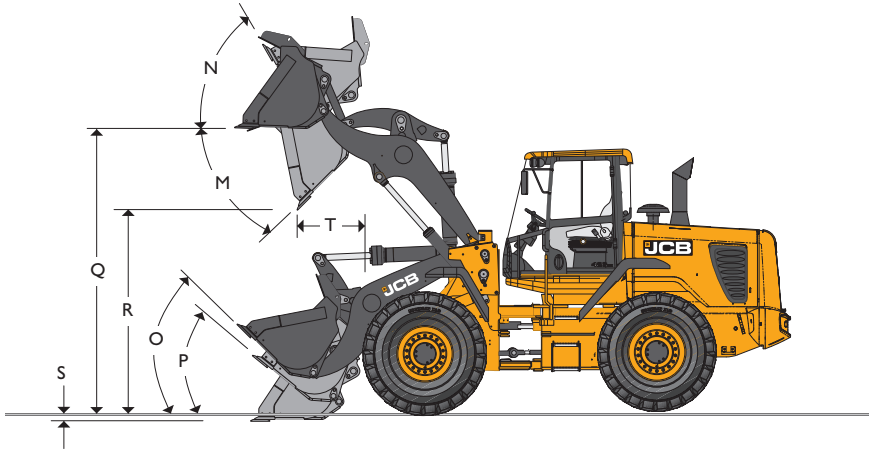

CHANGES TO OPERATING PERFORMANCE AND DIMENSIONS

Tyre size	Manufacturer	Type	Rating	Op. weight kg (lb)	Tipping loads Straight kg (lb)	Tipping loads Full turn kg (lb)	Dimensions Vertical mm (in)	Dimensions Width mm (in)
20.5 - 25 (crossply)	Firestone	SGG	L2	-348 (-770)	-245 (-540)	-215 (-475)	-9 (-0.354)	+5 (+0.197)
20.5 - 25 (crossply)	Goodyear	SGL	L2	-54 (-119)	-38 (-84)	-33 (-73)	-9 (-0.354)	+5 (+0.197)
20.5 R 25 (radial)	Goodyear	RL - 2 +	L2	+76 (+168)	+54 (+120)	+47 (+104)	-9 (-0.354)	+5 (+0.197)
20.5 R 25 (radial)	Bridgestone	VUT	L2	-160 (-353)	-113 (-250)	-99 (-220)	0	0
20.5 R 25 (radial)	Michelin	XTLA	L2	-160 (-353)	-113 (-250)	-99 (-220)	-9 (-0.354)	+5 (+0.197)
20.5 R 25 (radial)	Bridgestone	VMT	L3	0	0	0	0	0
550/65 R 25 (radial)	Michelin	XLD	L3	-120 (-265)	-85 (-187)	-74 (-163)	0	0
20.5 R 25 (radial)	Michelin	XRD1A	L4	+456 (+1006)	+332 (+710)	+282 (+622)	+29 (+1.142)	+8 (+0.315)
20.5 R 25 (radial)	Michelin	XMINED2	L5	+680 (+1500)	+480 (+1060)	+421 (+928)	+29 (+1.142)	-3 (-0.118)
20.5 R 25 (radial)	Goodyear	RL-5K	L5	+600 (+1323)	+423 (+933)	+372 (+820)	+29 (+1.142)	-3 (-0.118)
Optional additional bolt-on counterweight				+380 (+838)	+707 (+1559)	+598 (+1318)	0	0

Assumes the machine is fitted with 1.9m³ shovel with toeplates and Michelin 20.5R25 XHA (L3) tyres.

Bucket mounting		Direct	Direct	Direct	Direct	Direct	Direct	Quickhitch	Quickhitch	Quickhitch	Quickhitch	Quickhitch	Quickhitch
Bucket type		General purpose	Penetration	General purpose	General purpose	General purpose	General purpose	General purpose	General purpose	General purpose	General purpose	General purpose	General purpose
Bucket equipment		Tipped teeth	Tipped teeth	Reversible t/plate	Reversible t/plate	Reversible t/plate	Reversible t/plate	Tipped teeth	Tipped teeth	Reversible t/plate	Reversible t/plate	Reversible t/plate	Reversible t/plate
Bucket capacity (SAE heaped)	m³ (yd³)	2.0 (2.6)	2.0 (2.6)	1.9 (2.5)	2.1 (2.8)	2.4 (3.1)	2.7 (3.5)	1.8 (2.4)	2.0 (2.6)	1.9 (2.5)	2.1 (2.8)	2.4 (3.1)	2.7 (3.5)
Bucket capacity (struck)	m³ (yd³)	1.724 (2.255)	1.724 (2.244)	1.612 (2.108)	1.785 (2.335)	2.057 (2.690)	2.346 (3.068)	1.554 (2.033)	1.749 (2.288)	1.594 (2.085)	1.787 (2.337)	2.057 (2.690)	2.346 (3.068)
Bucket width	mm (ft-in)	2550 (8-4)	2550 (8-4)	2550 (8-4)	2550 (8-4)	2700 (8-10)	2700 (8-10)	2550 (8-4)	2550 (8-4)	2550 (8-4)	2550 (8-4)	2700 (8-10)	2700 (8-10)
Bucket weight	kg (lb)	1040 (2290)	1140 (2515)	925 (2040)	1040 (2515)	1262 (2782)	1329 (2930	800 (1765)	850 (1875)	800 (1765)	850 (1875)	1136 (2504)	1211 (2670)
Maximum material density	kg/m³ (lb/yd³)	2068 (3486)	2039 (3437)	2202 (3712)	1969 (4341)	1677 (2827)	1478 (2491)	2152 (4744)	1914 (4220)	2039 (4495)	1823 (4019)	1549 (2611)	1364 (2299)
Tipping load straight	kg (lb)	9687 (21356)	9574 (21107)	9795 (21594)	9687 (21356)	9465 (20867)	9398 (20719)	9067 (19989)	8969 (19773)	9067 (19989)	8969 (19773)	8747 (19284)	8680 (19136)
Tipping load full turn	kg (lb)	8273 (18239)	8159 (17988)	8370 (18453)	8273 (18239)	8051 (17749)	7984 (17602)	7748 (17081)	7659 (16885)	7748 (17081)	7659 (16885)	7437 (16396)	7370 (16248)
Payload	kg (lb)	4136 (9118)	4079 (8993)	4185 (9226)	4136 (9118)	4025 (8874)	3992 (8801	3874 (8541)	3829 (8441)	3874 (8541)	3829 (8441)	3718 (8197)	3685 (8124)
Maximum break out force	kN (lbf)	135 (30375)	135 (30375)	145 (32570)	135 (30375)	129 (29000)	120 (26977)	126 (28325)	118 (26526)	126 (28325)	118 (26526)	113 (25403)	106 (23830)
M Dump angle maximum	degrees	45°	45°	45°	45°	45°	45°	45°	45°	45°	45°	45°	45°
N Roll back angle at full height	degrees	52°	52°	52°	52°	52°	52°	52°	52°	52°	52°	52°	52°
O Roll back at carry	degrees	44°	44°	44°	44°	44°	44°	44°	44°	44°	44°	44°	44°
P Roll back at ground level	degrees	35°	35°	35°	35°	35°	35°	35°	35°	35°	35°	35°	35°
Q Load over height	mm (ft-in)	3645 (11-11)	3640 (11-11)	3640 (11-11)	3640 (11-11)	3638 (11-11)	3638 (11-11)	3645 (11-11)	3645 (11-11)	3640 (11-11)	3640 (11-11)	3638 (11-11)	3638 (11-11)
R Dump height (45° dump)	mm (ft-in)	2786 (9-2)	2786 (9-2)	2962 (9-8)	2914 (9-7)	2878 (9-5)	2814 (9-3)	2715 (8-11)	2683 (8-10)	2841 (9-4)	2793 (9-2)	2757 (9-1)	2693 (8-10)
S Dig depth	mm (ft-in)	33 (0-1)	33 (0-1)	30 (0-1)	30 (0-1)	32 (0-1)	32 (0-1)	33 (0-1)	33 (0-1)	30 (0-1)	30 (0-1)	32 (0-1)	32 (0-1)
T Reach at dump height	mm (ft-in)	1121 (3-8)	1121 (3-8)	946 (3-1)	996 (3-3)	1029 (3-5)	1093 (3-7)	1192 (3-11)	1242 (4-1)	1067 (3-6)	1117 (3-8)	1150 (3-9)	1214 (4-0)
Reach maximum (45° dump)	mm (ft-in)	1868 (6-2)	1868 (6-2)	1693 (5-7)	1743 (5-9)	1776 (5-10)	1840 (6-0)	1939 (6-4)	1989 (6-6)	1814 (5-11)	1864 (6-1)	1917 (6-3)	1961 (6-5)
Operating weight (includes 80kg operator and full fuel tank)	kg (lb)	12890 (28417)	13180 (29057)	12850 (28329)	12890 (28418)	13112 (28907)	13179 (29055)	13005 (28671)	13045 (28759)	13005 (28671)	13045 (28759)	13331 (29390)	13406 (29555)

LOADER – HT

Widely spaced four ram geometry provides the combination of excellent visibility with high bucket torque characteristics throughout the working arc. The pin, bush and sealing design on all pivot points provide extended maintenance intervals.

LOADER – ZX

Heavy duty three ram geometry providing high breakout forces with excellent loading characteristics. The pin, bush and sealing design on all pivot points provide extended maintenance intervals.

ENGINE – 426 (TIER 2 EMISSIONS)

6-cylinder wastegated turbo-charged, liquid cooled, direct injection diesel. Air-to-air charge-air cooling ensure low emissions and provides minimum fuel consumption. A remote sump oil drain facility simplifies servicing.

Type		4 stroke direct injection
Model		BTAA5.9C
Capacity	litres (in³)	5.9 (360)
Bore	mm (in)	102 (4.0)
Stroke	mm (in)	120 (4.75)
Aspiration		Turbo charged
Cylinders		6
Max gross power to SAE J1995/ISO 14396	kW (hp) @ 2000rpm	113 (152)
Rated gross power to SAE J1995/ISO 14396	kW (hp) @ 2200rpm	112 (150)
Nett power to SAE J1349/EEC 80/1269	kW (hp) @ 2200rpm	106 (142)
Max torque	Nm (lbf.ft) @ 1300rpm	633 (467)

Emissions:-
Relevant standards EUNR MM Stage 2 USA CFR Part 89
(Complies with EU/EPA "Off Highway" Construction Equipment Regulation Stage 2).

ENGINE – 426e (TIER 3 EMISSIONS)

6-cylinder wastegated turbo-charged, liquid cooled, direct injection common rail diesel. Air-to-air charge-air cooling ensure low emissions and provides minimum fuel consumption. A remote sump oil drain facility simplifies servicing.

Type		4 stroke direct injection
Model		QSB6.7
Capacity	litres	6.7
Aspiration		Turbo charged
Cylinders		6
Max gross power to SAE J1995/ISO 14396	kW (hp) @ 2000rpm	123 (165)
Rated gross power to SAE J1995/ISO 14396	kW (hp) @ 2200rpm	119 (160)
Nett power to SAE J1349/EEC 80/1269	kW (hp) @ 2200rpm	113 (152)
Max torque	Nm (lbf.ft) @ 1400rpm	732 (540)

Emissions:-
US EPA Tier 3, CARB Tier 3, EU Stage III.

TRANSMISSION

4 wheel drive, automatic smooth shift transmission electrically operated selector and gear change incorporating a speed inhibitor and modulation for smooth, responsive on-the-move direction and ratio changes. Single stage integral torque converter
4 forward and 3 reverse gears.

Type		Smooth shift powershift
Make & model		ZF 4WG 160
Torque converter stall ratio		2.549 : 1
1st gear	kph (mph)	7.44 (4.6)
2nd gear	kph (mph)	14.51 (9.0)
3rd gear	kph (mph)	25.19 (15.6)
4th gear (forward only)	kph (mph)	37.9 (23.5)

AXLES

Type	Epicyclic hub reduction
Make & model	JCB PR 12 front / PR 10 rear
Overall axle ratio	21.098 : 1
Rear axle oscillation	21°

STEERING

Priority steer hydraulic system with emergency steering. Piston pump meters flow through steer valve @ 190 bar (2756 psi) to provide smooth low effort response. Steering angle ± 40°. Steer rams located high in the chassis fabrication to provide protection from damage. Adjustable steering column.

BRAKES

Hydraulic power braking on all wheels, operating pressure 80 bar (1160psi). Dual circuit with accumulator back-up provide maximum safety under all conditions. Hub mounted, oil immersed, multi-plate disc brakes with organic brake linings are environmentally acceptable. Parking brake, mechanical disc type operating on transmission output shaft.

TYRES

A variety of tyre options are available including:
20.5-25 SGG (L2). 20.5-25 SGL (L2). 20.5R25 RL-2+ (L2). 20.5R25 VUT (L2). 20.5R25 XLTA (L2). 20.5R25 VMT (L3). 20.5R25 XHA (L3). 550/65R25 XLD (L3). 20.5R25 XRDIA (L4). 20.5R25 XMINED2 (L5). 20.5R25 RL-5K (L5). 620-75 MEGA XBIB. 750-75 MEGA XBIB.

426/426e HT – LOADER HYDRAULICS

Twin variable displacement piston pumps feed a "load sensing" system providing a fuel efficient and responsive distribution of power as required. Main services are servo actuated from a single lever (joystick) loader control. Auxiliary circuits controlled via additional lever or joystick mounted electrical buttons. Accumulator back-up is available to control loader in the event of loss of pump pressure.

Pump type		Twin variable displacement piston pumps
Pump 1 max. flow	l/min (UK gal/min)	132 (29)
Pump 1 max. pressure	bar (lb/in²)	250 (3625)
Pump 2 max. flow	l/min (UK gal/min)	132 (29)
Pump 2 max. pressure	bar (lb/in²)	160 (2320)
Hydraulic cycle times at full engine revs		**seconds**
Arms raise (full bucket)		4.4
Bucket dump (full bucket)		1.0
Arms lower (empty bucket)		2.7
Total cycle		8.1

Ram dimensions		Bore	Rod	Closed centres	Stroke
Bucket ram x2	mm (in)	100 (3.9)	60 (2.4)	1600 (63.0)	1055 (41.5)
Lift ram x2	mm (in)	110 (4.3)	60 (2.4)	1260 (49.6)	820 (32.3)
Steer ram x2	mm (in)	80 (3.1)	50 (2.0)	621 (24.4)	312 (12.3)

426/426e HT – ELECTRICAL SYSTEM

24 volt negative ground system, 70 Amp alternator with 2 x 110 Amp hour low maintenance batteries. Isolator located in rear of machine. Ignition key start/stop and pre-heat cold start. Primary fuse box. Other electrical equipment includes quartz halogen, twin filament working lights, front/rear wash/wipe, heated rear screen, full road going lights, clock, gauge and warning light monitoring. Connectors to IP67 standard.

System voltage	Volt	24
Alternator output	Amp hour	70
Battery capacity	Amp hour	2 x 110

426/426e HT – CAB

Resiliently mounted ROPS/FOPS structure (tested in accordance with ISO 3471-1 : 1986 / ISO 3449 : 1984). De-luxe operator environment combines ergonomically located controls with a high level of appointment and low internal noise levels. Entry/exit is via large rear hinged door and anti-slip steps. Excellent forward visibility is provided by a 3 section curved, laminated windscreen and low waistline. Extensive instrumentation includes electronic monitoring panel and display (EMS). Heating / ventilation provides balanced and filtered air distribution throughout the cab via a powerful 11 kW capacity heater. The unitary construction allows easy sealing and prevents ingress of dust. A transmission lock on the selector prevents inadvertent engagement and the loader controls can be isolated for safe road travel. Noise level measured in accordance with 86/662/EEC, amendment 95/27/EC

Interior pressure level : 73 Lp (A)
Exterior power level : 105 Lw (A)

426/426e HT – ATTACHMENTS

An extensive range of attachments including pallet forks, crane jibs, high dumping buckets and timber grapples are available to fit directly or via the JCB quickhitch mounting.

426/426e HT – SERVICE FILL CAPACITIES

	litres (UK gal)
Hydraulic system	210 (46.3)
Fuel tank	230 (50.7)
Engine oil sump	14 (3.1)
Transmission oil system	27 (5.9)
Axle oil (front)	39 (8.6)
Axle oil (rear)	37 (8.4)
Engine coolant system	35 (7.7)

426/426e HT – STANDARD EQUIPMENT

Loader: Bucket reset mechanism, loader arm kickout mechanism, loader control isolator, single lever servo control, high torque true parallel lift geometry combines with excellent visibility between the arms.

Engine: Air cleaner – 2 stage dry type – cyclonic with primary and safety elements, silencer and exhaust stack, sedimenter, twin bowl fuel filters, fan guards.

Transmission: Single lever shift control, speed inhibitor, neutral start, disconnect on footbrake and loader lever, disconnect isolator switch, direction changes and kickdown on gear selector and loader control lever.

Axles: Epicyclic wheel hub reduction, fixed front, oscillating rear.

Brakes: Multi-plate wet disc brakes, organic linings, dual circuit hydraulic power assisted. Parking disc brake on transmission output shaft.

Hydraulics: Piston pumps with priority steer, emergency steer back-up, 2 spool loader circuit with accumulator support, 3rd spool auxiliary hydraulic circuit as standard. Hydraulic tank located in the rear chassis fabrication.

Steering: Adjustable steering column, "soft feel" steering wheel 5 turns lock to lock, resilient stops on max lock.

Cab: ROPS/FOPS safety structure, interior reading light, centre mounted master warning light. Electronic monitoring panel with LCD message display. Two speed intermittent front windscreen wipe/wash and self park, single speed rear windscreen wipe/wash and self park. 3 speed heater/demisting with replaceable air filter, LH and RH opening windows, sun visor, internal rear view mirror, external mirrors, adjustable suspension seat with belt and headrest, operator storage facilities, laminated windscreen, heated rear screen, loader control isolator, horn, adjustable armrest.

Electrical: Road lights front and rear, parking lights, front and rear working lights, reverse alarm and light, rear fog light, battery isolator, radio wiring and speakers, 70 amp alternator, rotating beacon.

Bodywork: Front and rear fenders, side and rear access panels, flexible bottom step, full width rear counterweight, recovery hitch, lifting lugs.

426/426e HT – OPTIONAL EQUIPMENT

Air conditioning, limited slip differentials front/rear axles, Turbo 2 and dust buster pre-cleaner, tooth guard, replaceable bucket wearparts, epoxy coated radiator/coolers, automatically reversing cooling fan, stainless steel brake pipes, smooth ride system (SRS), hydraulic quickhitch, full rear fenders, reversing camera (colour), additional front and rear worklights, auto greasing system, joystick or Multi-lever hydraulic controls, auxiliary hydraulic control on seperate lever or joystick mounted (proportional), Smart reverse alarm, parallel lift links (recommended for pallet forks), canopy cab, Wastemaster cab, Livelink telematics, widecore radiator, sealed electrics, grease gun and cartridge, basic and full belly guard kits, mesh air intake screen, ARV kit, safety strut, transmission cooler bypass, non-heated mirrors, 24V to 12V in cab converter, cab screen guards, additional front and rear work lights, heated air suspension seat, heated mirrors, extra counterweight, light guards, front and rear blinds, engine block heater, biodegradable hydraulic oil, cab filtration options, fire extinguisher, number plate light kit, auxiliary 4th spool hydraulic service, high lift arms, grease gun, LiveLink telematics.

426/426e HT – WASTEMASTER STANDARD EQUIPMENT

Machine as above including: basic and full belly guard kit, turbo 2 pre-cleaner, carbon cab air intake filter, front and rear light guards, widecore radiator, mesh air intake screen.

426/426e ZX – LOADER HYDRAULICS

Twin variable displacement piston pumps feed a "load sensing" system providing a fuel efficient and responsive distribution of power as required. Main services are servo actuated from a single lever (joystick) loader control. Auxiliary circuits controlled via additional lever or joystick mounted electrical buttons. Accumulator back-up is available to control loader in the event of loss of pump pressure.

Pump type		Twin variable displacement piston pumps
Pump 1 max. flow	l/min (UK gal/min)	132 (29)
Pump 1 max. pressure	bar (lb/in²)	250 (3625)
Pump 2 max. flow	l/min (UK gal/min)	132 (29)
Pump 2 max. pressure	bar (lb/in²)	160 (2320)
Hydraulic cycle times at full engine revs		**seconds**
Arms raise (full bucket)		4.4
Bucket dump (full bucket)		1.3
Arms lower (empty bucket)		2.7
Total cycle		8.4

Ram dimensions		Bore	Rod	Closed centres	Stroke
Bucket ram x1	mm (in)	130 (5.1)	70 (2.8)	1100 (43.3)	521 (20.5)
Lift ram x2	mm (in)	110 (4.3)	60 (2.4)	1260 (49.6)	820 (32.3)
Steer ram x2	mm (in)	80 (3.1)	50 (2.0)	621 (24.4)	312 (12.3)

426/426e ZX – ELECTRICAL SYSTEM

24 volt negative ground system, 70 Amp alternator with 2 x 110 Amp hour low maintenance batteries. Isolator located in rear of machine. Ignition key start/stop and pre-heat cold start. Primary fuse box. Other electrical equipment includes quartz halogen, twin filament working lights, front/rear wash/wipe, heated rear screen, full road going lights, clock, gauge and warning light monitoring. Connectors to IP67 standard.

System voltage	Volt	24
Alternator output	Amp hour	70
Battery capacity	Amp hour	2 x 110

426/426e ZX – CAB

Resiliently mounted ROPS/FOPS structure (tested in accordance with ISO 3471-1 : 1986 / ISO 3449 : 1984). De-luxe operator environment combines ergonomically located controls with a high level of appointment and low internal noise levels. Entry/exit is via large rear hinged door and anti-slip steps. Excellent forward visibility is provided by a 3 section curved, laminated windscreen and low waistline. Extensive instrumentation includes electronic monitoring panel and display (EMS). Heating / ventilation provides balanced and filtered air distribution throughout the cab via a powerful 11 kW capacity heater. The unitary construction allows easy sealing and prevents ingress of dust. A transmission lock on the selector prevents inadvertent engagement and the loader controls can be isolated for safe road travel. Noise level measured in accordance with 86/662/EEC, amendment 95/27/EC

Interior pressure level : 73 Lp (A)
Exterior power level : 105 Lw (A)

426/426e ZX – ATTACHMENTS

An extensive range of attachments are available to fit directly or via the JCB quickhitch mounting.

426/426e ZX – SERVICE FILL CAPACITIES

	litres (UK gal)
Hydraulic system	210 (46.3)
Fuel tank	230 (50.7)
Engine oil sump	14 (3.1)
Transmission oil system	27 (5.9)
Axle oil (front)	39 (8.6)
Axle oil (rear)	37 (8.4)
Engine coolant system	35 (7.7)

426/426e ZX – STANDARD EQUIPMENT

Loader: Bucket reset mechanism, loader arm kickout mechanism, loader control isolator, single lever or multi lever servo control, high breakout forces with excellent loading characteristics.

Engine: Air cleaner 2 stage dry type – cyclonic with primary and safety elements, sedimenter, twin bowl fuel filters, alternator and air conditioning compressor drive belt guards, isolated cooling package with hydraulically driven cooling fan.

Transmission: Single lever shift control, speed inhibitor, neutral start, disconnect on footbrake and loader lever, disconnect isolator switch, direction changes and kickdown on gear selector and loader control lever.

Axles: Epicyclic wheel hub reduction, fixed front, oscillating rear.

Brakes: Multi-plate wet disc brakes, organic linings, dual circuit hydraulic power. Parking disc brake on transmission output shaft.

Hydraulics: Twin piston pumps with priority steer, emergency steer back-up, 2 spool loader circuit with accumulator support, 3rd spool auxiliary hydraulic circuit as option.

Steering: Adjustable steering column, "soft feel" steering wheel 5 turns lock to lock, resilient stops on max lock.

Cab: ROPS/FOPS safety structure, interior reading light, centre mounted master warning light. Electronic monitoring panel with LCD message display. Two speed intermittent front windscreen wipe/wash and self park, single speed rear windscreen wipe/wash and self park. 3 speed heater/demisting with replaceable air filter, LH and RH opening windows, sun visor, internal rear view mirror, external mirrors, adjustable suspension seat with belt and headrest, operator storage facilities, laminated windscreen, heated rear screen, loader control isolator, horn, adjustable armrest.

Electrical: Road lights front and rear, parking lights, front and rear working lights, reverse alarm and light, rear fog light, battery isolator, radio wiring and speakers, 70 amp alternator, rotating beacon.

Bodywork: Front and rear fenders, side and rear access panels, flexible bottom step, full width rear counterweight, recovery hitch, lifting lugs.

426/426e ZX – OPTIONAL EQUIPMENT

Air conditioning, limited slip differentials front/rear axles, Turbo 2 and dust buster pre-cleaner, tooth guard, replaceable bucket wearparts, epoxy coated radiator/coolers, automatically reversing cooling fan, stainless steel brake pipes, smooth ride system (SRS), hydraulic quickhitch, full rear fenders, reversing camera (colour), additional front and rear worklights, auto greasing system, joystick or Multi-lever hydraulic controls, auxiliary hydraulic control on seperate lever or joystick mounted (proportional),Smart reverse alarm, canopy cab, Wastemaster cab, Livelink telematics, widecore radiator, sealed electrics, grease gun and cartridge, basic and full belly guard kits, mesh air intake screen, ARV kit, safety strut, transmission cooler bypass, 24V to 12V in cab converter, cab screen guards, additional front and rear work lights, heated air suspension seat, heated mirrors, extra counterweight, light guards, front and rear blinds, engine block heater, biodegradable hydraulic oil, cab filtration options, fire extinguisher, number plate light kit, auxiliary 4th spool hydraulic service, grease gun, LiveLink telematics.

426/426e ZX – WASTEMASTER STANDARD EQUIPMENT

Machine as above including: basic and full belly guard kit, turbo 2 pre-cleaner, carbon cab air intake filter, front and rear light guards, widecore radiator, mesh air intake screen.

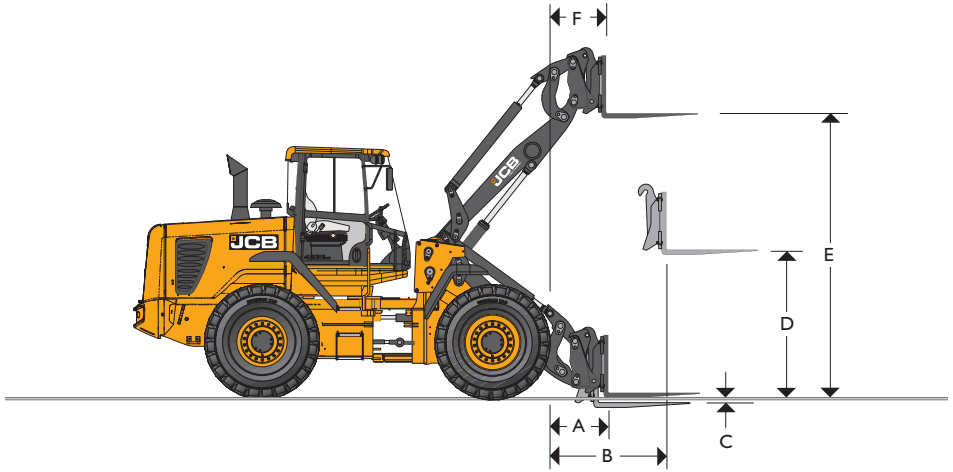

426/426e HT – LOADER DIMENSIONS – FORK FRAME WITH FORKS – Standard height arm

Assumes the fitment of Michelin 20.5R25 XHA (L3) tyres			Parallel fork	Non parallel fork
	Fork carriage width	mm (ft-in)	1500 (4-11)	1500 (4-11)
	Length of tines	mm (ft-in)	1220 (4-0)	1220 (4-0)
A	Reach at ground level	mm (ft-in)	760 (2-6)	770 (2-6)
B	Reach at arms horizontal	mm (ft-in)	1545 (5-1)	1545 (5-1)
C	Below ground level	mm (ft-in)	-52 (-0-2)	-25 (-0-1)
D	Arms, horizontal height	mm (ft-in)	1906 (6-3)	1867 (6-1)
E	Arms, maximum height	mm (ft-in)	3718 (12-2)	3695 (12-1)
F	Reach at maximum height	mm (ft-in)	792 (2-7)	800 (2-7)
	Payload*	kg (lb)	5000 (11023)	5000 (11023)
	Tipping load straight	kg (lb)	7571 (16691)	7571 (16691)
	Tipping load full turn (40°)	kg (lb)	6492 (14312)	6492 (14312)
	Attachment weight	kg (lb)	440 (970)	440 (970)

*At the centre-of-gravity distance 500mm (1ft-5½in). Based on 80% of full turn tipping load as defined by ISO 8313.
Manual fork spacings at 50mm (2in) increments. Fork section 100mm x 50mm (4in x 2in).

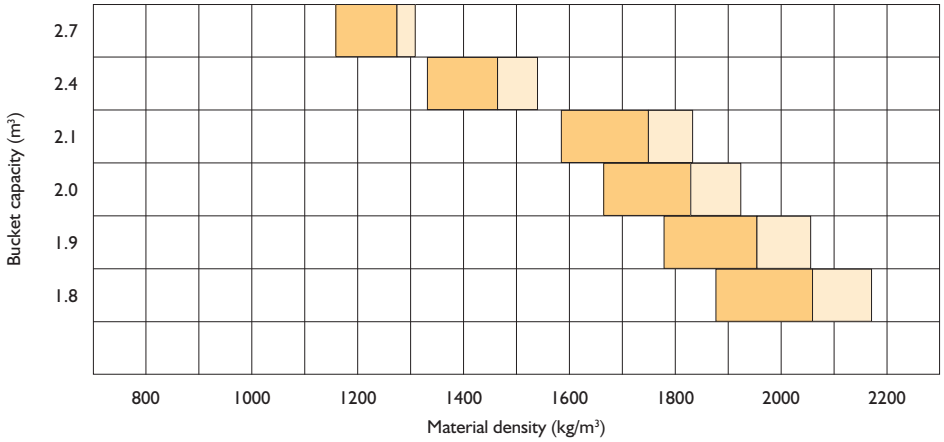

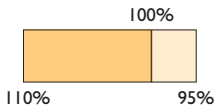

Bucket fill factors

BUCKET SELECTOR

	Loose density		Fill factor
Material	**kg/m³**	**lb/yd³**	**%**
Snow (fresh)	200	337	110
Peat (dry)	400	674	100
Sugar beet	530	894	100
Coke (loose)	570	961	85
Barley	600	1012	85
Petroleum coke	680	1146	85
Wheat	730	1231	85
Coal bitumous	765	1290	100
Fertiliser (mixed)	1030	1737	85
Coal anthracite	1046	1764	100
Earth (dry) (loose)	1150	1939	100
Nitrate fertiliser	1250	2180	85
Sodium chloride (dry) (salt)	1300	2192	85
Cement Portland	1440	2428	100
Limestone (crushed)	1530	2580	100
Sand (dry)	1550	2613	100
Asphalt	1600	2698	100
Gravel (dry)	1650	2782	85
Clay (wet)	1680	2832	110
Sand (wet)	1890	3187	110
Fire clay	2080	3507	100
Copper (concentrate)	2300	3878	85
Slate	2800	4721	100
Magnetite	3204	5402	100

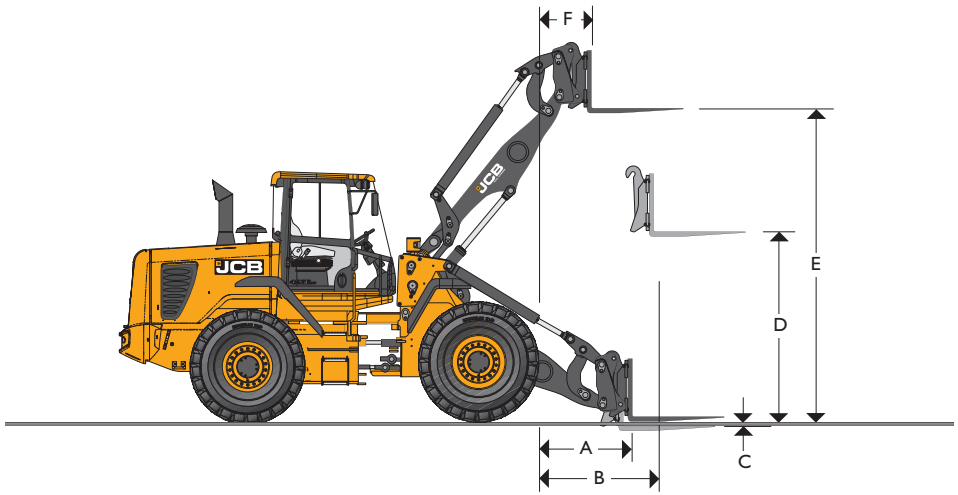

426/426e HT – LOADER DIMENSIONS – FORK FRAME WITH FORKS – High lift arm

Assumes the fitment of Michelin 20.5R25 XHA (L3) tyres			Parallel fork	Non parallel fork
	Fork carriage width	mm (ft-in)	1500 (4-11)	1500 (4-11)
	Length of tines	mm (ft-in)	1220 (4-0)	1220 (4-0)
A	Reach at ground level	mm (ft-in)	1173 (3-10)	1183 (3-11)
B	Reach at arms horizontal	mm (ft-in)	1893 (6-3)	1893 (6-3)
C	Below ground level	mm (ft-in)	11 (0-0)	38 (0-1)
D	Arms, horizontal height	mm (ft-in)	1906 (6-3)	1867 (6-1)
E	Arms, maximum height	mm (ft-in)	4148 (13-7)	4125 (13-6)
F	Reach at maximum height	mm (ft-in)	954 (3-2)	962 (3-2)
	Payload*	kg (lb)	4518 (9960)	4518 (9960)
	Tipping load straight	kg (lb)	6587 (14521)	6587 (14521)
	Tipping load full turn (40°)	kg (lb)	5648 (12452)	5648 (12452)
	Attachment weight	kg (lb)	440 (970)	440 (970)

*At the centre-of-gravity distance 500mm (1ft-5½in). Based on 80% of full turn tipping load as defined by ISO 8313.
Manual fork spacings at 50mm (2in) increments. Fork section 100mm x 50mm (4in x 2in).

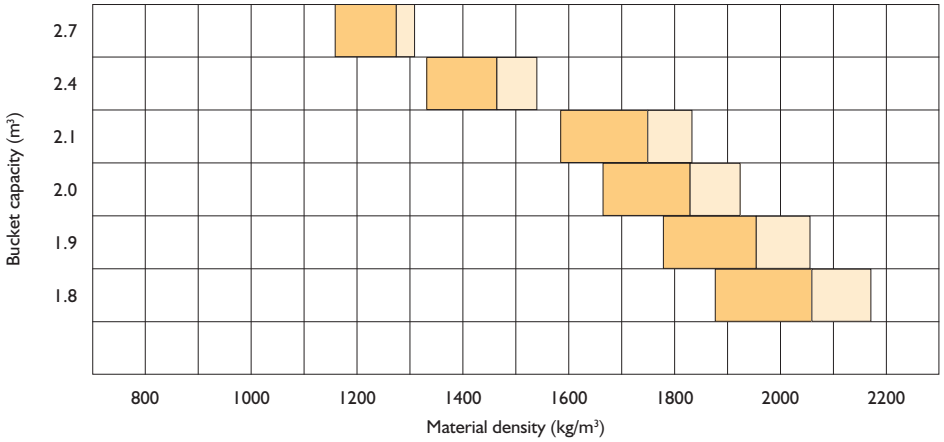

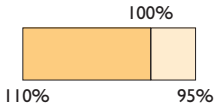

Bucket fill factors

BUCKET SELECTOR

	Loose density		Fill factor
Material	**kg/m³**	**lb/yd³**	**%**
Snow (fresh)	200	337	110
Peat (dry)	400	674	100
Sugar beet	530	894	100
Coke (loose)	570	961	85
Barley	600	1012	85
Petroleum coke	680	1146	85
Wheat	730	1231	85
Coal bitumous	765	1290	100
Fertiliser (mixed)	1030	1737	85
Coal anthracite	1046	1764	100
Earth (dry) (loose)	1150	1939	100
Nitrate fertiliser	1250	2180	85
Sodium chloride (dry) (salt)	1300	2192	85
Cement Portland	1440	2428	100
Limestone (crushed)	1530	2580	100
Sand (dry)	1550	2613	100
Asphalt	1600	2698	100
Gravel (dry)	1650	2782	85
Clay (wet)	1680	2832	110
Sand (wet)	1890	3187	110
Fire clay	2080	3507	100
Copper (concentrate)	2300	3878	85
Slate	2800	4721	100
Magnetite	3204	5402	100

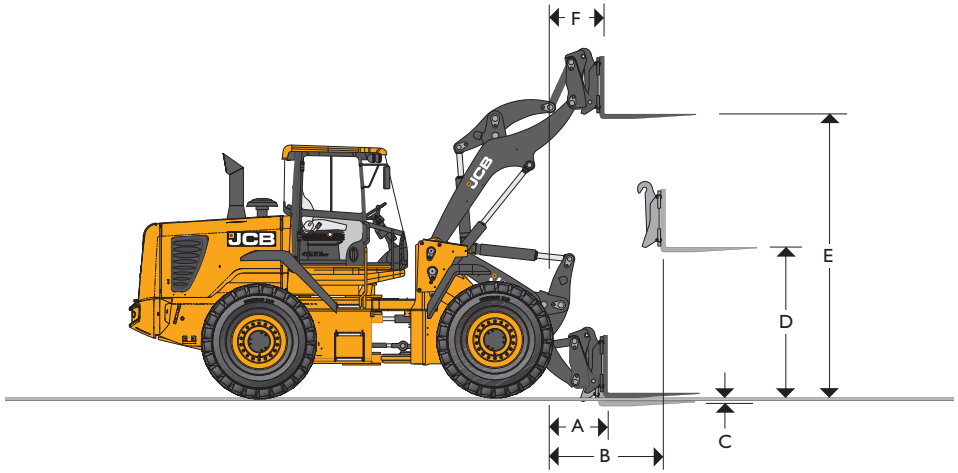

426/426e ZX – LOADER DIMENSIONS – FORK FRAME WITH FORKS

	Fork carriage width	mm (ft-in)	1500 (4-11)
	Length of tines	mm (ft-in)	1220 (4-0)
A	Reach at ground level	mm (ft-in)	770 (2-6)
B	Reach at arms horizontal	mm (ft-in)	1545 (5-1)
C	Below ground level	mm (ft-in)	-42 (-0-2)
D	Arms, horizontal height	mm (ft-in)	1867 (6-1)
E	Arms, maximum height	mm (ft-in)	3695 (12-1)
F	Reach at maximum height	mm (ft-in)	800 (2-7)
	Payload*	kg (lb)	5260 (11596)
	Tipping load straight	kg (lb)	7722 (17024)
	Tipping load full turn (40°)	kg (lb)	6575 (14495)
	Attachment weight	kg (lb)	440 (970)

*At the centre-of-gravity distance 500mm (1ft-5½in). Based on 80% of full turn tipping load as defined by ISO 8313.
Assumes the fitment of Michelin 20.5R25 XHA (L3) tyres. Manual fork spacings at 50mm (2in) increments. Fork section 100mm x 50mm (4in x 2in).

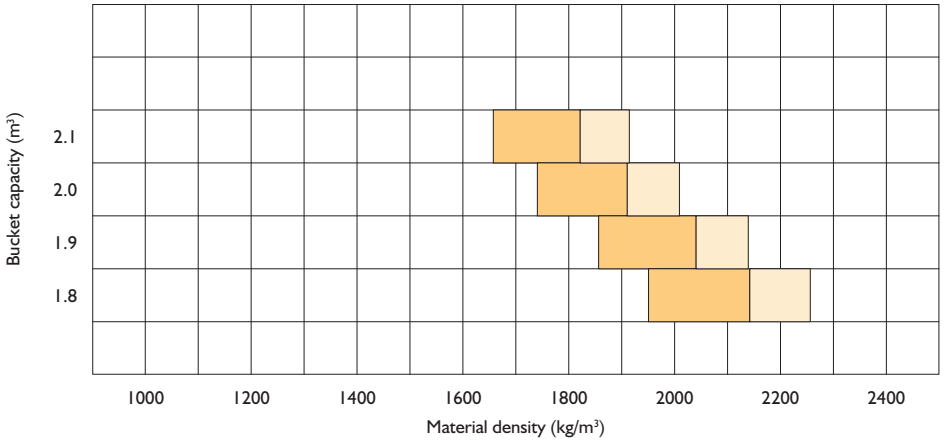

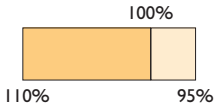

Bucket fill factors

BUCKET SELECTOR

	Loose density		Fill factor
Material	**kg/m³**	**lb/yd³**	**%**
Snow (fresh)	200	337	110
Peat (dry)	400	674	100
Sugar beet	530	894	100
Coke (loose)	570	961	85
Barley	600	1012	85
Petroleum coke	680	1146	85
Wheat	730	1231	85
Coal bitumous	765	1290	100
Fertiliser (mixed)	1030	1737	85
Coal anthracite	1046	1764	100
Earth (dry) (loose)	1150	1939	100
Nitrate fertiliser	1250	2180	85
Sodium chloride (dry) (salt)	1300	2192	85
Cement Portland	1440	2428	100
Limestone (crushed)	1530	2580	100
Sand (dry)	1550	2613	100
Asphalt	1600	2698	100
Gravel (dry)	1650	2782	85
Clay (wet)	1680	2832	110
Sand (wet)	1890	3187	110
Fire clay	2080	3507	100
Copper (concentrate)	2300	3878	85
Slate	2800	4721	100
Magnetite	3204	5402	100

A GLOBAL COMMITMENT TO QUALITY

JCB's total commitment to its products and customers has helped it grow from a one-man business into Britain's largest privately owned manufacturer of backhoe loaders, crawler excavators, wheeled excavators, telescopic handlers, wheeled loaders, dump trucks, rough terrain fork lifts, industrial fork lifts, mini/midi excavators, skid steer loaders, tractors and compaction equipment.

By making constant and massive investments in the latest production technology, the JCB factories have become some of the most advanced in the world.

By leading the field in innovative research and design, extensive testing and stringent quality control, JCB machines have become renowned all over the world for performance, value and reliability.

And with a global sales and service network of more than 650 dealers and agents, we aim to deliver the best customer support in the industry.

Through setting the standards by which others are judged, JCB has become one of the world's most impressive success stories.

Mixed Sources
Product group from well-managed forests and other controlled sources
www.fsc.org Cert no. TT-COC-002291
© 1996 Forest Stewardship Council
FSC

JCB Sales Limited, Rocester, Staffordshire ST14 5JP. Tel: 01889 590312. Fax: 01889 590588. Web: http://www.jcb.com

JCB reserves the right to change specifications without notice. Illustrations shown may include optional equipment and accessories. The JCB logo is a registered trademark of J C Bamford Excavators Ltd.

9999/5418 01/11 Issue 4